Optical Liquid Level Switches

Optomax Industrial Series

- Reverse polarity, ESD and transient over-voltage protected
- N and P type output configurations, capable of sinking or sourcing up to 1A, can directly drive small loads
- Choice of material; Polysulfone (standard) or Trogamid ®
- Choice of threads

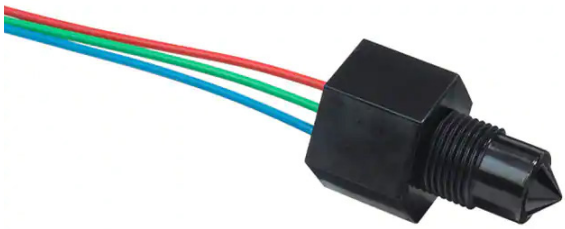

Description

SST's Optomax Industrial Sensors are low-power, intelligent liquid level switches designed for demanding applications. Operating from standard industrial supply voltages, they feature a FET output which can directly drive loads up to 1A.

These compact, robust sensors offer high temperature tolerance, and fast, accurate response with long life and high reliability. Easy to install and interface with customer's electronics, they are compatible with a wide range of fluids and chemicals, making them perfect in space-constrained industrial settings [a].

Specifications

Technical Specifications	
Supply voltage (Vs)	4.5...15.4V_{DC} or 8...30V_{DC}
Supply current (Is)	2.5mA max. (Vs = 15.4V_{DC}) or 7.5mA max. (Vs = 30V_{DC})
Operating temperatures	Standard: -25...+80°C (-13...+176°F)
	Extended: -40...+125°C (-40...+257°F)
Storage temperatures	Standard: -30...+85°C (-22...+185°F)
	Extended: -40...+125°C (-40...+257°F)
Housing material [b]	Polysulfone or Trogamid® [c]
Switch termination	20AWG, 250mm PVDF wires, or 22AWG PVC cable.
Output Values	
Output current (Iout)	1A max [d]
Output Voltage (Vout) when Vs = 4.5...15.4V_{DC}	
Output high	Vout = Vs - 1.5V max
Output low	Vout = 0V + 0.5V max
Output Voltage (Vout) when Vs = 8...30V_{DC}	
Output high	Vout = Vs - 1.8V max
Output low	Vout = 0V + 0.7V max

Core Applications

- Valve / pump control
- Leak detection
- Clean environments
- Tank level control; fill/empty
- Overfill protection
- Sump level switching

[a] Avoid reflective surfaces within 10mm of the sensing tip, see SST's Liquid Level Switches – Installation, Operation and Compatibility Guide.

[b] Before use check that the fluid in which you wish to use these devices is compatible either with Polysulfone or Trogamid®. Some common fluids and compatibility can be found in SST's Liquid Level Switches – Installation, Operation and Compatibility Guide.

[c] When using Trogamid® above +85°C some oil based liquids can cause deformation of the sensing tip, and must be tested for compatibility.

[d] Except on N-type with a 10kΩ internal resistor (-002).

Outline Drawing

All dimensions shown in mm. Tolerances = ±0.5mm.

Type 2

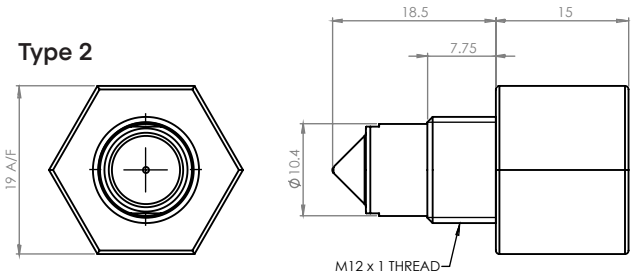

Type 6

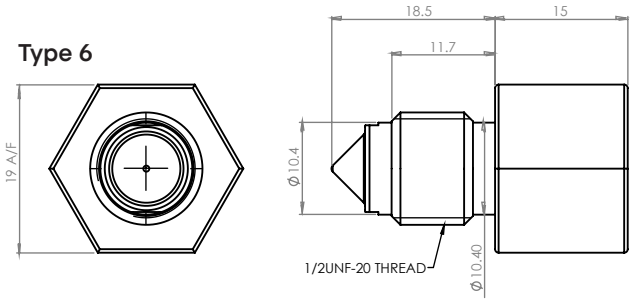

Type 7

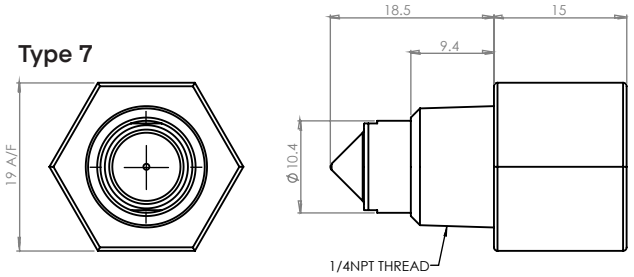

Housing Specifications

Installation drawings and 3D (.step) files available on the product webpage.

	Housing Type		
	Type 2	Type 6	Type 7
Thread [e]	M12x1x 8g	1/2" - 20 UNF [f]	1/4" NPT [g]
Pressure [h]	20bar / 290 psi maximum		
Tightening Torque	1.5 Nm / 13.26 in-lbs maximum		

Electrical Interface

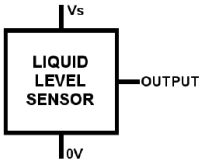

Wire	Cable	Designation
Red	Red	Vs
Green	White	Output
Blue	Black	0V

[e] Recommended nuts and sealing accessories outlined within the Accessory Table (sold separately)

[f] Suitable for SAE-5 straight threaded port. Refer to SAE Standard J1926-1 (ISO 11926-1) for more information.

[g] NPT version can be sealed with PTFE tape.

[h] SST supplied M12 seal washer only suitable for low pressure environments (<7 bar). For higher pressure applications O-rings, PTFE tape or other sealing compounds are recommended. Customers should test in their application as required.

Circuit Diagrams

In order to suit any application, these sensors have been designed with various output circuit configurations. They are identified by the 3-digit code at the end of the part number as shown in Order Information.

-001

N- Type with Flyback Protection Diode High in Air

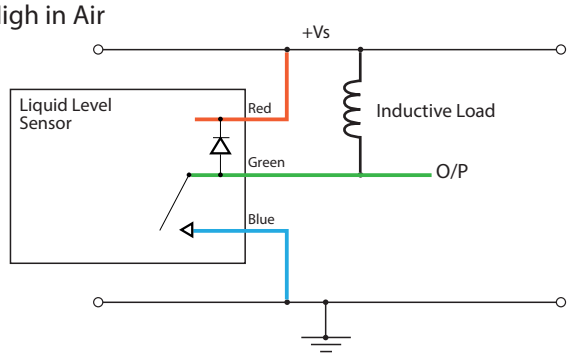

N- Type with Flyback Protection Diode Low in Air

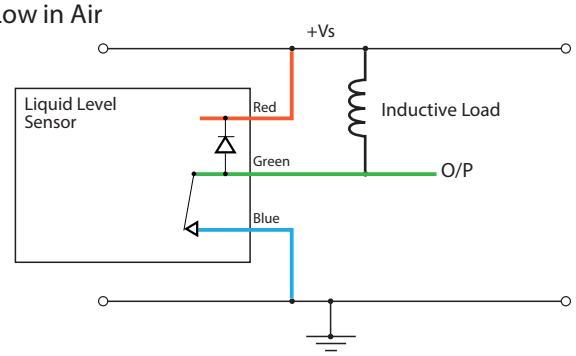

-002

N- Type with Internal 10kΩ Pull-Up Resistor High in Air

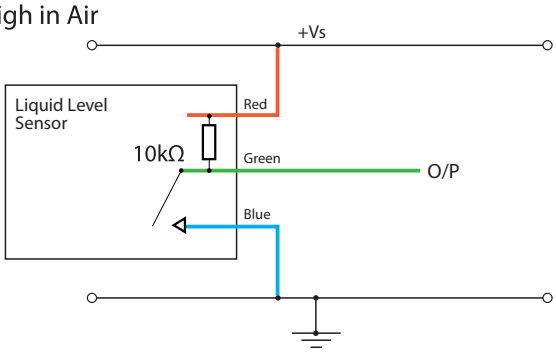

N- Type with Internal 10kΩ Pull-Up Resistor Low in Air

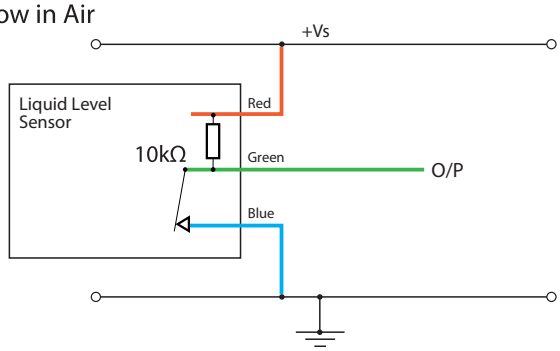

-003

N- Type High in Air

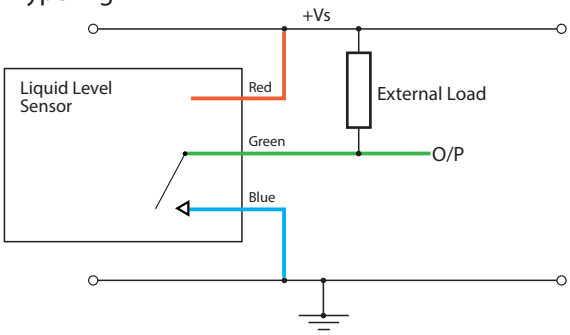

N- Type Low in Air

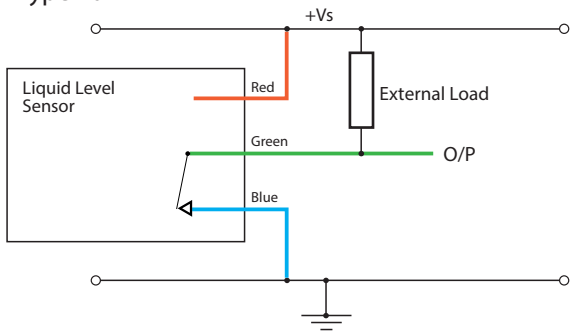

-004

P-Type High in Air

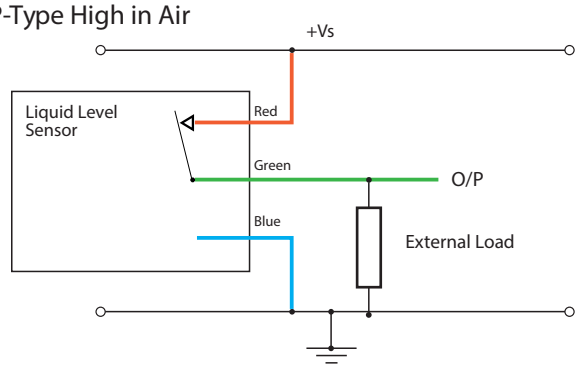

P-Type Low in Air

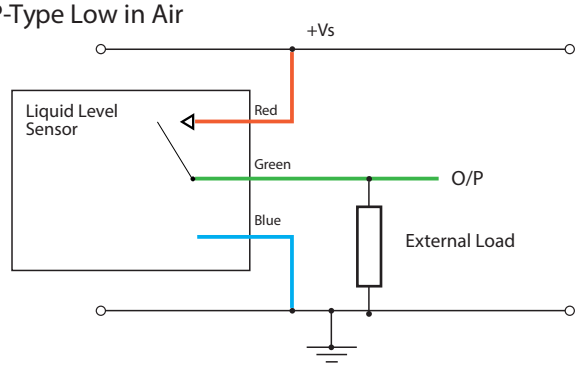

Caution

Take care when connecting loads. The minimum load impedance should not be less than Vs/max output current.

Note: Shorting the output to Vs or 0V will result in irreparable damage to the sensor.

Note: Colours shown are for 3-wire version. See electrical interface table on page 2 for equivalent cable colours.

Ordering Guide

Generate your specific part number using the convention shown below.
Use only those letters and numbers that correspond to the sensor and output options you require — omit those you do not.

a DwyerOmega brand

L L X X X 0 D 3 X X X - X X X - X X

Housing Material
C Polysulfone
T Trogamid ®

Housing Type
2 Type 2 M12x1
6 Type 6 1/2" - 20 UNF
7 Type 7 1/4" NPT

Operating Temp.
0 -25...+80°C
1 -40...+125°C

Output Logic
L Output low in air
Blank Output high in air

Supply Voltage
24 8-30V_{DC}
Blank 4.5-15.4V_{DC}

Output Type
001 N-type with flyback
002 N-Type with 10kΩ pull-up
003 N-type
004 P-type

Termination
Blank flying leads 20AWG 0.25mm
C3 3m cable [i]

Accessory Table

Thread	Housing Type	Accessory	Material	Order Code
M12	2x0	Seal washer	Nitrile	41000190-002
M12	2x0	Seal washer	EPDM	41000190-003
M12	2x0	Seal washer	VAMAC	41000190-004
M12	2x0	'O' ring	As required	Not sold by SST
M12	2x0	Nut	Zinc-plated brass	LL-NUT-ZNC
M12	2x0	Nut	Stainless steel	LL-NUT-STS
1/2" -20 UNF	6x0	'O' ring	As required - See SAE J1926-1	Not sold by SST
1/4" NPT	7x0	Sealing tape	PTFE	Not sold by SST
1/4" NPT	7x0	Sealing compound	Sealing compound must be compatible with housing material	Not sold by SST

Caution

Do not exceed maximum ratings and ensure sensor(s) are operated in accordance with their requirements.

Carefully follow all wiring instructions. Incorrect wiring can cause permanent damage to the device.

SST Sensing Ltd recommend using alcohol based cleaning agents. Do NOT use chlorinated solvents such as trichloroethane as these are likely to attack the sensor material.

Failure to comply with these instructions may result in product damage.

Information

As customer applications are outside of SST Sensing Ltd.'s control, the information provided is given without legal responsibility. Customers should test under their own conditions to ensure that the equipment is suitable for their intended application. Before use, check that the fluid in which you wish to use these devices is compatible with Polysulfone or Trogamid®.

General Note: SST Sensing Ltd. reserves the right to make changes to product specifications without notice or liability. All information is subject to SST Sensing Ltd's own data and considered accurate at time of going to print.

For technical assistance or advice, please email: sensors@dwyeromega.com

[i] C3 cable option is limited to an ambient temperature range of -20...+80°C (-4°F...+176°F)

DWYEROMEGA™
Improving the world, one measurement at a time.

SST Sensing Ltd, 5 Hagmill Crescent , Coatbridge, ML5 4NS United Kingdom, Tel: +44 1236 459020
www.sstsensing.com, e-mail: sensors@dwyeromega.com